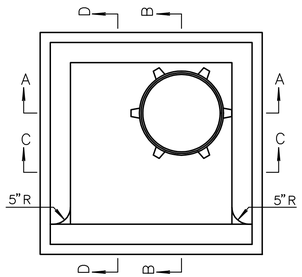

PLAN VIEW
L x 10'

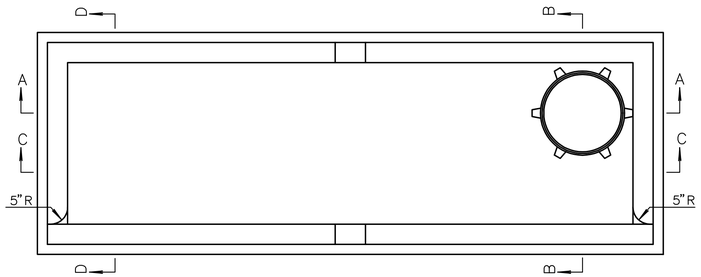

PLAN VIEW
L > 10'

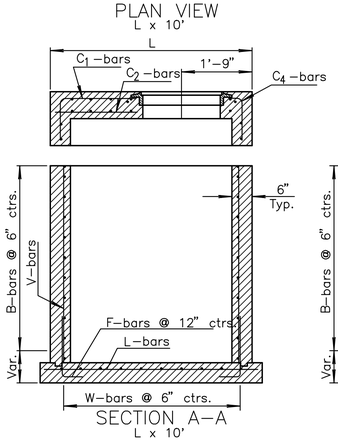

SECTION A–A
L x 10'

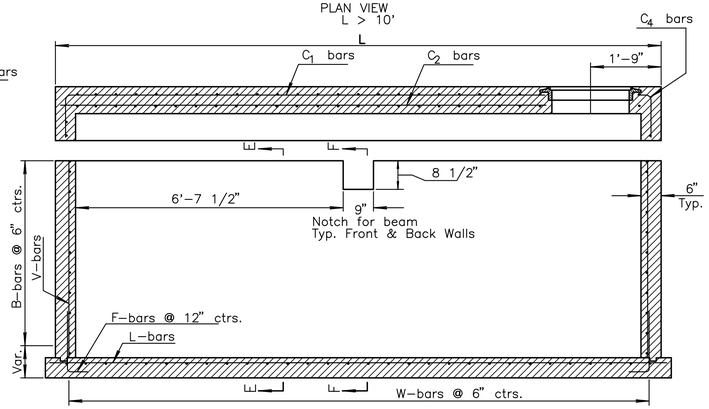

SECTION A–A
L > 10'

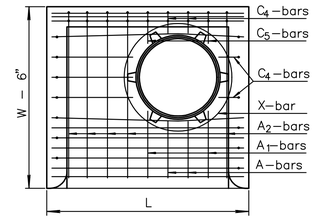

INLET TOP REINFORCING

INLET TOP FRONT ELEVATION

GENERAL NOTES

Use Class I Concrete throughout. All exposed edges shall be finished with an edging tool.

Manhole opening, where used shall be placed to afford easy access to top of shaped invert.

All castings shall be gray iron.

When so ordered by the Construction Manager, the top of the manhole shall be sloped slightly to approximately fit the ground line or other conditions.

Dimensions and weights of cast iron as shown on this sheet are minimum. Larger dimensions and/or heavier weights of cast iron may be used. The weight of castings includes no allowance for fillets and overruns.

Curb and Gutter sections shall be shaped as shown where required by the installation of curb inlets.

For additional notes and details on Light Type Cast Iron Manhole Cover and Ring Type C, see Sheet C126 "Reinforced Concrete Manhole Details".

All reinforcing steel shall be #4 at 6" centers except where noted. Minimum clear distance to reinforcement shall be 1½".

Floor of inlet shall be shaped as shown in various "Examples" on Sheet C126 "Reinforced Concrete Manhole Details". Concrete used for shaping shall be unreinforced Class I Concrete or concrete pavement mix.

The ends of all pipes installed in inlets shall be cut off flush with the inside face of the inlet wall.

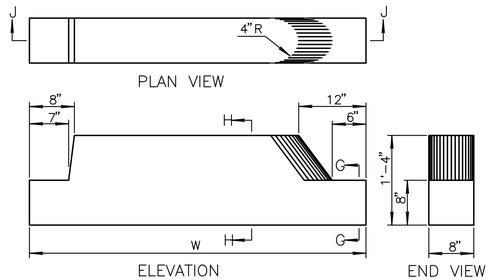

PLAN VIEW

ELEVATION

END VIEW

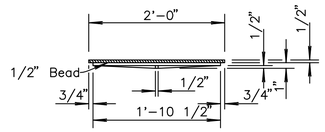

MANHOLE COVER TYPE C
(Weight= 64 lbs.)

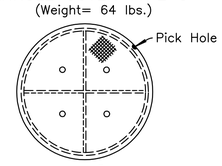

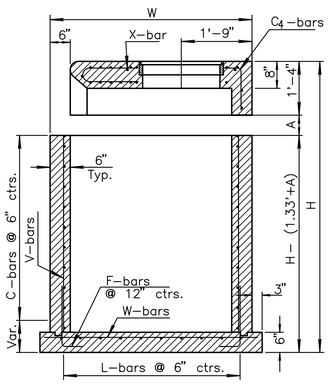

SECTION B–B

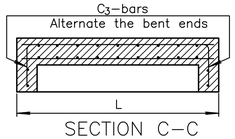

SECTION C–C

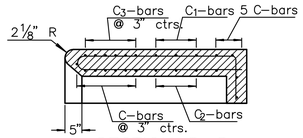

SECTION D–D

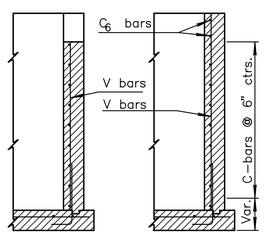

SECTION F–F SECTION E–E

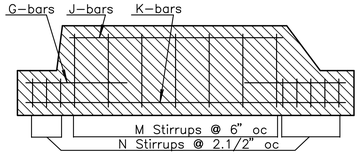

SECTION J–J

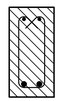

SECTION H–H

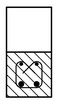

SECTION G–G

CENTER BEAM DETAILS

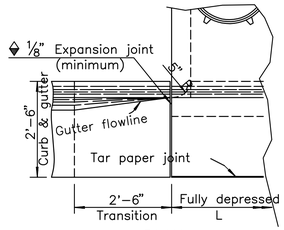

PLAN

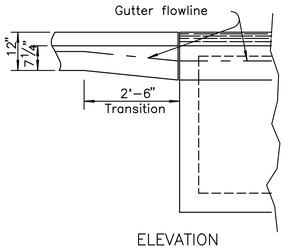

ELEVATION

DETAILS OF GUTTER TRANSITION

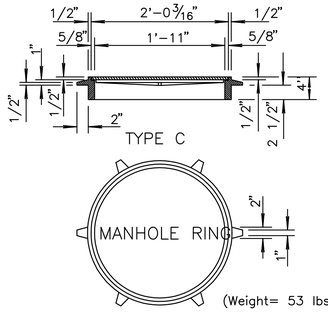

TYPE C

* LIGHT TYPE
MANHOLE COVER & RING

* Rings with four equally spaced lugs will be permitted.

NOTES

"A" Adjustment space, 6" maximum. (Contractor's option, 1" to 6") Allows top to be adjusted to finished curb height, or slope top as may be required.

"S" maximum = 2'–3" + 1/2" x ID of outlet pipe.

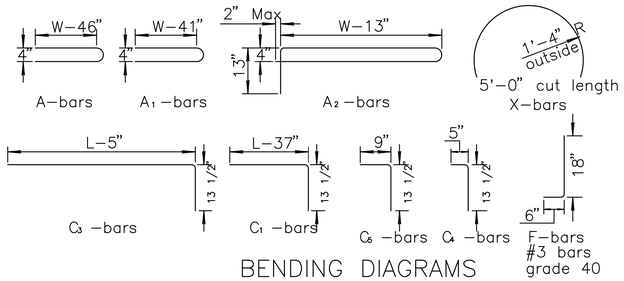

BENDING DIAGRAMS

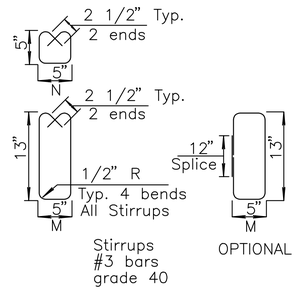

NOTE: DRAWINGS AND SPECIFICATIONS ARE ORGANIZED FOR CONVENIENCE OF REFERENCE ONLY. THIS ORGANIZATION IS NOT INTENDED TO ESTABLISH THE SCOPE OF WORK OF ANY TRADE. THE WORK OF ANY GIVEN TRADE, SUPPLIER OR SUBCONTRACTOR MAY BE REPRESENTED IN DRAWINGS OR SPECIFICATION SECTIONS THAT CROSS OVER BETWEEN DESIGN DISCIPLINES AND MAY BE SHOWN ON OTHER DRAWINGS OR IN OTHER SPECIFICATION SECTIONS WITHIN THE CONTRACT DOCUMENTS. ESTABLISHING THE SCOPE OF ANY TRADE OR SUPPLIER IS THE RESPONSIBILITY OF THE CONTRACTOR. NEITHER THE OWNER NOR ARCHITECT WILL ESTABLISH THE LIMITS OR JURISDICTION OF ANY SUBCONTRACTOR.

GLMV Architecture
9229 Ward Parkway, Ste. 210
Kansas City, MO 64114
Tel: (816) 444-4200
www.glmv.com

PEC
PROFESSIONAL ENGINEERING CONSULTANTS, P.A.
104 SOUTH PINE PITTSBURG, KS 66762
620-235-0195 www.pec1.com
STATE CERT. OF AUTHORITY NO. 000465
PEC PROJECT # 14E14-000

STATE OF MISSOURI
BRIAN COOMES
02/12/2016
NUMBER PE-2015029306
PROFESSIONAL ENGINEER

CONSTRUCTION DOCUMENTS

© 2016 GLMV Architecture, Inc.
All work herein is the exclusive property of GLMV Architecture, Inc. and is not to be copied or used in any way without the express written consent of GLMV Architecture, Inc. All drawings, specification, ideas, designs and arrangements appearing herein constitute the original and unpublished Work of: GLMV Architecture, Inc.

JOPLIN PUBLIC SAFETY TRAINING FACILITY

5102 SWEDE LANE, JOPLIN, MO

MARK	DATE	DESCRIPTION

TYPE 22 PRECAST INLET DETAILS

JOB NO.	13061.000
DATE	02-12-2016
DRAWN	BMC
CHECKED	BDR

C125

DWG. 30 OF 141

CONSTRUCTION DOCUMENTS

Saved: 01-25-2016 3:07:31 PM by BMC
Plot Scale 1:1 02-12-2016 10:23:27 AM by BRIAN COOMES
U:\Pittsburg\2014\14E14\000\Muni\Drawings\Plan Set\14E14-000_C-125_Type 22 Precast Inlet